Strainer, Temporary-Strainer (conical)



Material: AISI 316L

Connection: Wafer type, DIN EN 1092-2 or ANSI 150, 300 or 600lbs

DN / Inch	A	B	H1	H2	C	D
25 / 1"	63	23	50	110	3	20
32 / 1 1/4"	73	28	50	120	3	25
40 / 1 1/2"	83	34	54	140	3	30
50 / 2"	102	44	64	180	3	40
65 / 2 1/2"	121	59	76	200	3	40
80 / 3"	131	70	100	230	3	65
100 / 4"	162	92	127	260	3	70
125 / 5"	192	118	140	320	3	80
150 / 6"	216	140	152	400	3	95
200 / 8"	272	178	254	470	3	115
250 / 10"	328	244	330	520	3	130
300 / 12"	378	295	390	600	3	170
350 / 14"	438	321	450	680	5	180
400 / 16"	489	368	500	780	5	200
450 / 18"	550	442	550	900	5	215
500 / 20"	599	465	550	1000	5	250

All dimensions are in millimeters

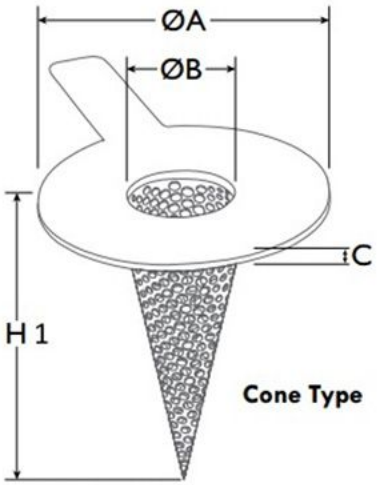

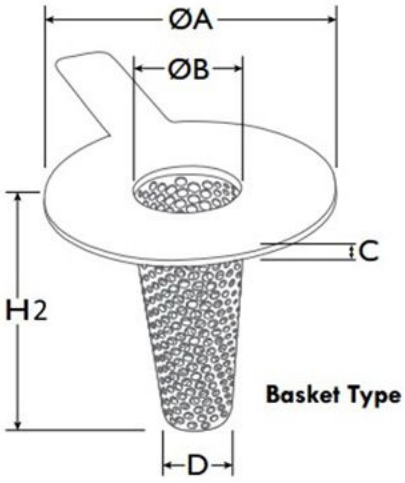

LUDEMANN ARMATUREN

Broichstrasse 52
D-51109 Köln

Phone +49 (0)221-93 35 34-0
Fax +49 (0)221-93 35 34-29

E-mail armaturen@ludemann.info
Web www.ludemann.info